NORTHEAST™
LANTERN

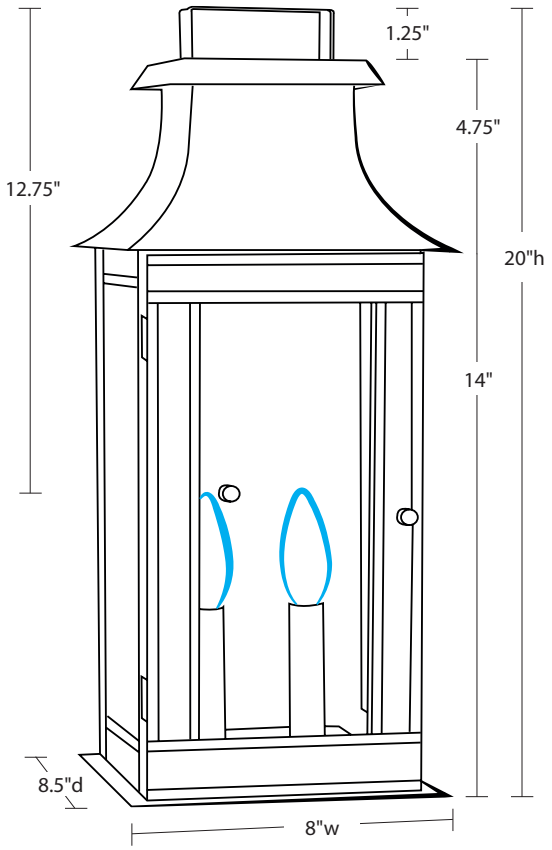

5651

Concord Collection
Wall Sconce

Dimensions
Width: 8"
Depth: 8.5"
Height: 20"

Mounting Height: 12.75"
Mounting Area: 6.5" x 12"

Socket Option(s)
(LT2) Candelabra; 60 watt max
(MED) Medium Base; 75 watt max

UL & cUL Listed
Suitable for wet locations

Finishes
AB - Antique Brass
DAB - Dark Antique Brass
DB - Dark Brass
VG - Verdi Gris
AC - Antique Copper

Glass
CLR - Clear
CSG - Clear Seedy
SMG - Seedy Marine
FST - Frosted

Glass Hurricane Chimney
CLR - Clear
FCIM - Frosted

© 2021 Northeast Lantern LLC
6 Commerce Way | Exeter, NH 03833 | Phone: 800-892-1206 | Fax: 888-477-6649
email: info@northeastlantern.com
www.northeastlantern.com | made in the USA